FORD Focus,Edge Fusion interface installation manual

This interface can insert RGB navigation/2AV/Camera signal onto Ford Focus, Edge ,Fusion and other ford screen.

Features of this interface:

- ✓ It is compatible with all Ford 4Pin LVDS screen CD/screen systems which are available in Focus, Edge→ ,Fusion and more, they have separate CD unit and screens.
- ✓ 64Mega dynamical memory is used inside for 2-dimensional spatial zoom and guarantee stable video signal to panel no matter what the input video source the installer use.[PAL/NTSC/No signal]
- ✓ Plug and play installation without hurting the original circuit and warranty label, Special PPS shell makes this interface stable against noise, Low EMI, and very reliable.[the black plastic shell is actually conductive]
- ✓ Optional Touch operation to installed DVD/TV tuner can be activated, so the installer can operate DVD without using the remote controller.
- ✓ Optional control port for installer's expanding convenience, the control port has a Audio Relay selection trigger voltage ,also one touch screen selection trigger voltage, so the user can original touch screen for installer navigation unit, this is especially good for imported ford cars.
- ✓ This device is car temperature verified, surge voltage stability testified .

1. System connection

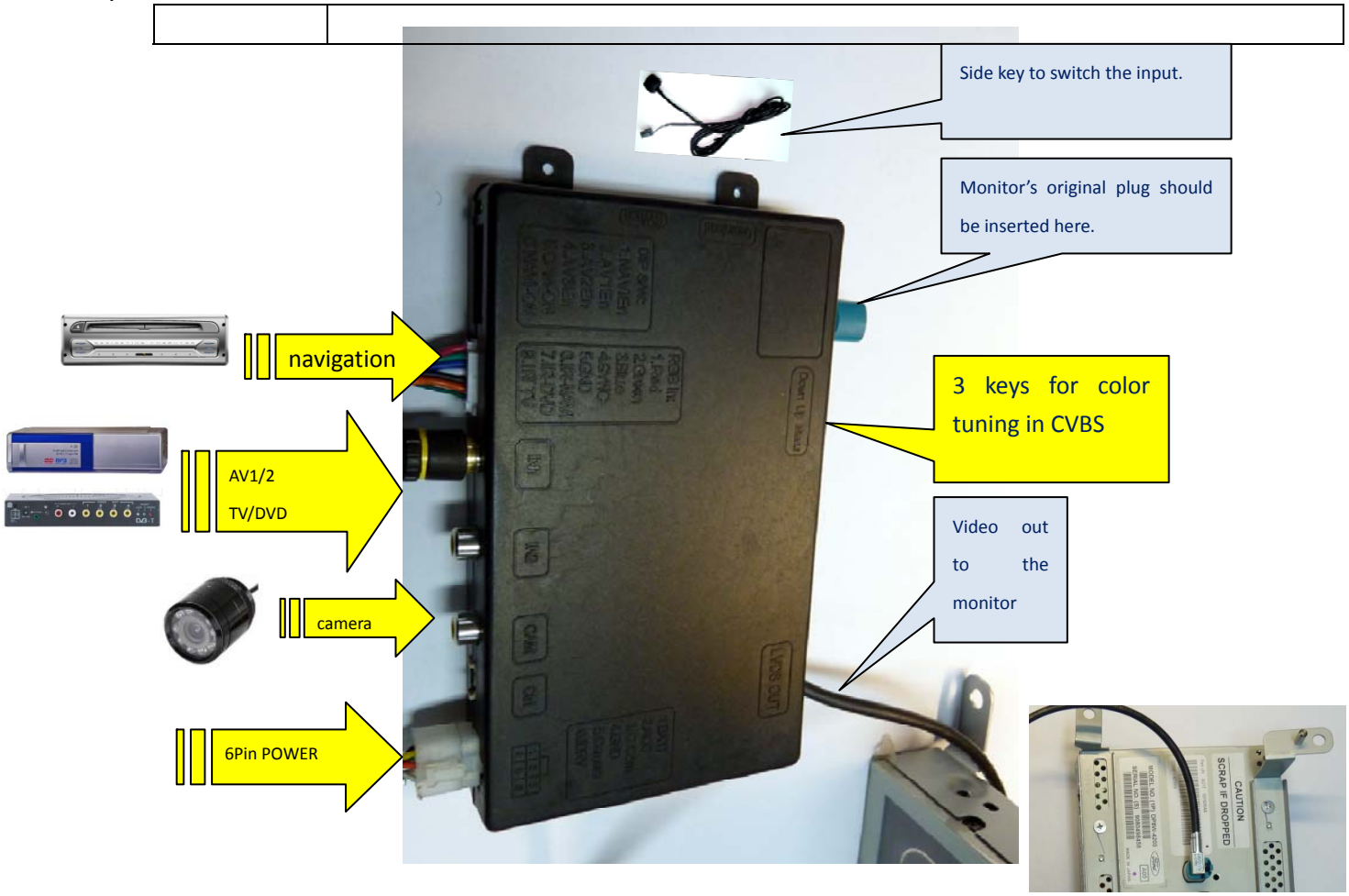

The 6Pin POWER conn. For the Interface box :

YELLOW: 12V battery power

RED=ACC: whenthis wire goes to 12V, the interface works.

BLACK: Ground for chassis。

GREEN: reverse wire[=12V]。

white: switch signal when =12V.[max 25V]

GRAY: specific control signal from the CAN box, do not connect to anything.

The Ford monitor has a 4Pin LVDS connector, connecting the CD/Radio unit and the Monitor. The connector to monitor should be inserted to this video interface's CAR-In socket

Then the interface's LVDS tail plug should be inserted onto this monitor's rear socket. Which was used by CD's 4Pin connector.

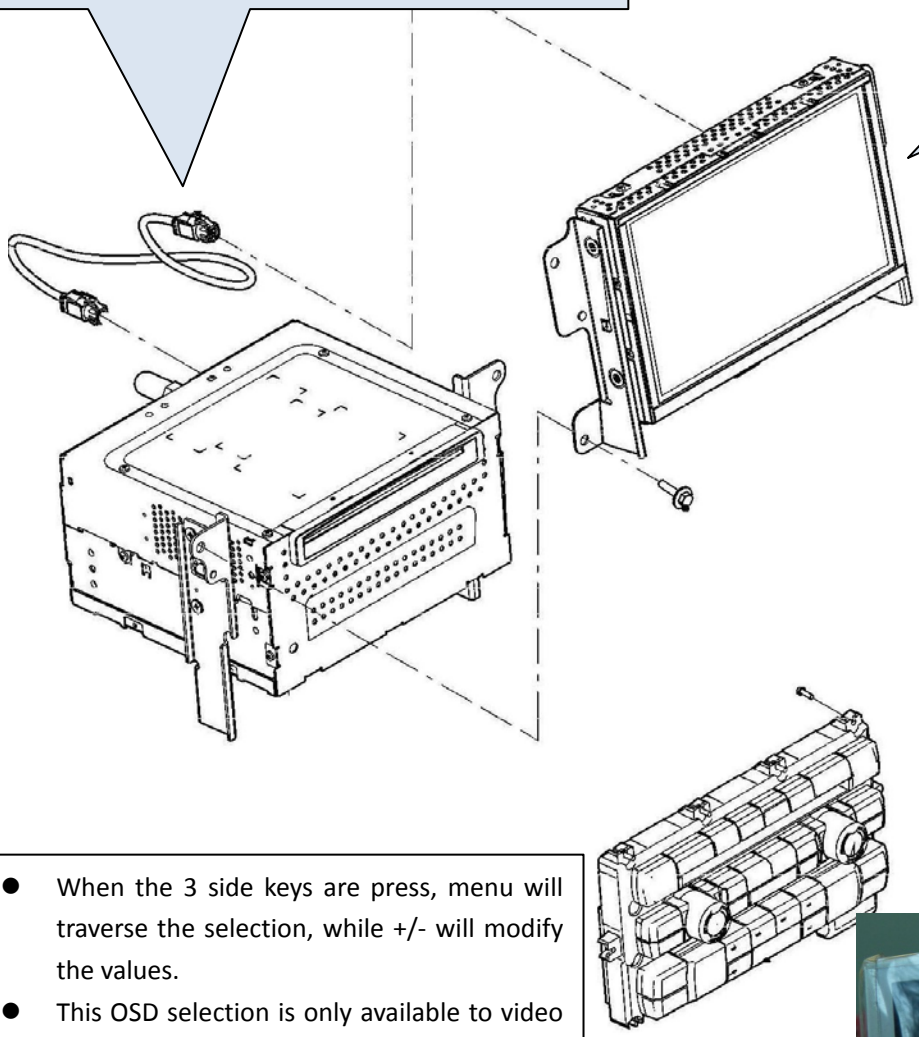

- When the 3 side keys are press, menu will traverse the selection, while +/- will modify the values.
- This OSD selection is only available to video input, the RGB-navi already been tuned to have nice color.
- The DVD/TUNER/NAVI option is to set the IR output to the video source, so the user can use touch screen to control DVD and video source operations.

2. The Ctrl port switch.

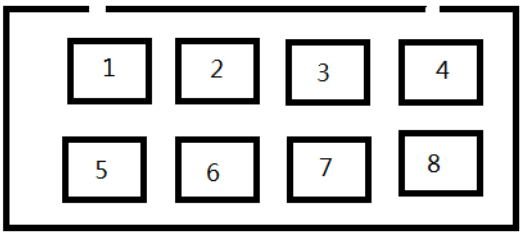

The Ctrl port has 8 pins, it is not necessary for the installers to use it in most cases, however it can be used for installer's convenience in cased it is needed.

Pin 1, Pin2	+5V output voltage for sound-switch-relay when AV1 is selected, 0V when AV2 selected. [max output=2A, while most mechanical relay only needs 0.1~0.3A.]	All ford cars have an AUX input, which can be connected to the external audio input. If the installer needs to send 2 or more extra audio into the car speaker, one mechanical relay should be used to switch the sound. This pin can pull the relay with +5V.
Pin3:	constant +5V when the unit is working.	max 2A output.
Pin 4: Pin 8	GND	
Pin 5:	data bus for touch screen	Pin5,6 has high voltage protection inside in case wrongly connected to 12V by installer.[max 25V]. Pin5,6 should NOT be connected to GND,otherwise it halts the CPU inside.
Pin 6:	clock bus for touch screen.	
Pin 7	+5V output voltage for touch screen switch relay, when in inserted video mode, this pin=5V, when in original car video mode, this pin=0V. max 2A output.	For imported cars which needs installation of touch navigation computer, this voltage can be used to switch the original touch screen. When we want to use the original touch screen for installed device, the monitor should be opened, and the touch connector can be found, which is 4Pin in the picture below.l

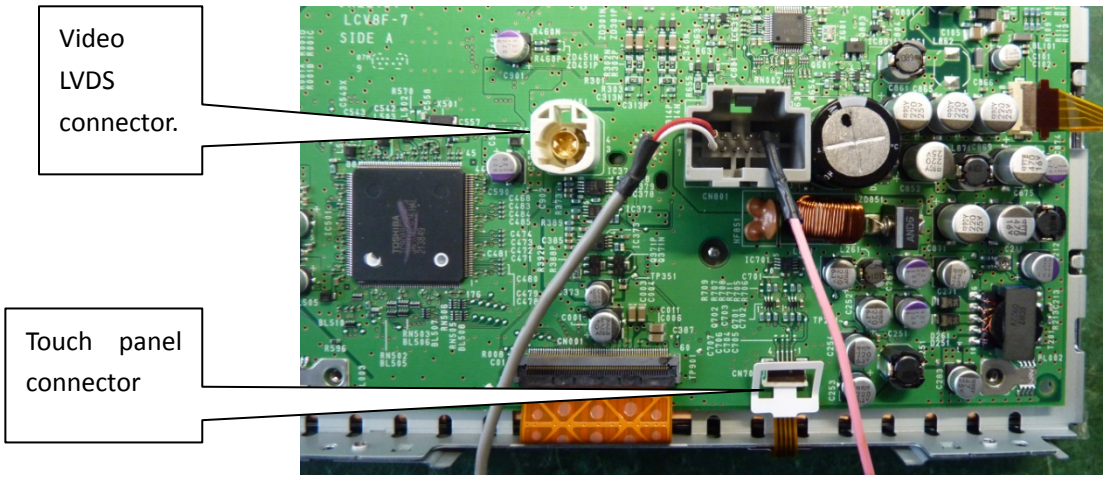

3.Touch screen operation

The screen already has a high quality touch screen on top of the LCD, this screen can be used for navigation, also it can be used for DVD/TV control.

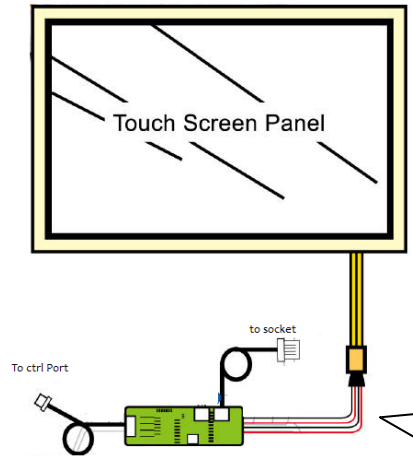

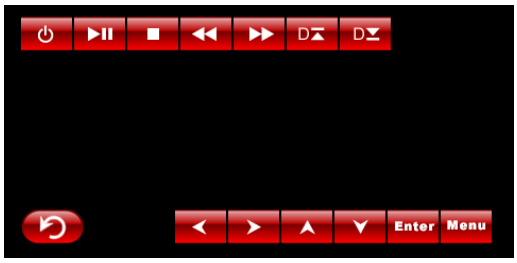

When this daughter PCB is inserted, the user touch the panel, this red touch icons will pop out, and the user can control DVD/TV with it.
The 3 keys can choose the DVD/TV type connected to this unit.

DIP switch setting:

DIP	=ON [DIP=Down side.]	=OFF
1	RGB enabled	RGB disabled.
2,	AV1 for DVD enabled	AV1 disabled
3	AV2 for Tuner/MP5 or extra video enabled	AV2disabled
5	This is reverse camera trigger wire go to CAM when Green wire= 12V]	go to car video when Green wire= 12V
6	Touch screen IR learn for re-installed navigation or DVD or tuner.	Set to OFF for normal use.

4. Parameters

No.	name	parameter
1	RGB video amplitude	0.7Vpp with 75 ohm impedance
2	sync amplitude in RGB-navi port	3~5Vpp with 5K ohm impedance Sync should be NTSC composite with negative polarity. This unit support
3	RGB resolution	NTSC-RGB navigation, that is. 320X240,400X240,480X240 [vertically some computer only output 234 line,it is also compatible]
4	Av1,Av2, cam video	0.7Vpp with 75 ohm impedance
5	Av1,Av2, cam standard	NTSC/PAL/SECAM automatic switch
6	Normal work Power consumption	2.4W [0.2A @12V]
7	Standby current	< 10mA
8	Reverse trigger threshold	>5V trigger
9	Ctrl port Pin1,2 and Pin7: Relay pull voltage for Audio and touch screen selection	5V volts.
10	Ctrl port Pin1,2 and Pin7: Relay pull current for Audio and touch screen selection	2A. All pins on the ctrl port tested to have no damage when short-circuit to GND for 2 minutes.
11	Work temperature	-40 ~ +85C